JACK

包缝机 Overlock Sewing Machine

E4系列 E4 Series

产品使用说明书 Preduct Users' Manual

使用说明和零件样本下载地址：

PLEASE DOWN LOAD THE MANUAL AND SPARE PARTS FROM THE FOLLOWING WEBSITE:

ÇäÑÌÇÁ ÊÍåèä äÊèÈ ÇäÊÙäèåÇÊ èâ×Ù ÇäÊÈÌèä åæ ÇäåèâÙ ÇäÊÇäê:

POR FAVOR DESCARGAR EL MANUAL Y LIBRO DE PARTES Y REPUESTOS LO SIGUIENTE EN SITIO WEB:

Пожалуйста, загрузите инструкцию по эксплуатации и деталировку (список запасных частей) со следующего вебсайта:

http://download.chinajack.com

产品标准代号：QB/T1515-2005

Standard code of the products: QB/T1515-2005

杰克缝纫机
JACK SEWING MACHINE
HTTP://WWW.CHINAJACK.COM

杰克缝纫机股份有限公司
NEW JACK SEWING MACHINE CO.,LTD.

- 公司地址(Address of Company):
  台州市椒江区机场南路15号
  No. 15 Rd Airport South, Jiaojiang District Taizhou City, Zhejiang, P.R.C
- 国内销售部(Domestic Trade Department):
  电话(TEL): 0086-576-88177788 88177789
  传真(FAX): 0086-576-88177758
- 国贸部(International Trade Department):
  电话(TEL): 0086-576-88177782 88177774
  传真(FAX): 0086-576-88177787
- 免费售后服务电话：8008576858
  http://www.chinajack.com

- 资料如有更改，恕不另行通知，以实样为准。
  You will be not informed if the file has been revised. Please set sample as standard

2016年11月版

为了安全

对于缝纫机本身各种重量，我们充分考虑到它的安全性，请遵照基本的操作方法，安全的进行工作

● 拆除为保证安全设置的装置的零件的情况下使用，是非常危险的，请绝对不要拆除后使用

● 缝纫机在使用时，请不要在缝纫机台板上放置工具及缝纫时不必要的物品

● 在缝纫机进行检修、调节、清扫、穿线换针等工作时为防止发生事故，务必切断电源，在确认即使踩下缝纫机踏板，缝纫机也不转动后，再进行操作

OBSERVE THESE SAFETY PRECAUTIONS

Though Our takes the utmost care to produce safe sewing machines and devices, operstors should follow these basic safety rules

● To prevent accident, do not remove safety devices or parts while operating the machine

● Do not leave tools or other unnecesary objects on the machine table while operating the machine

● Before maintenance, adjusting, cleaning, thresding or replacing the needle, and to prevent accidents be sure the power is the power is turned off, Check that the machine will not operate the pedal is pressed

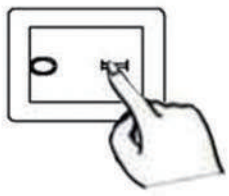

● 在离开缝纫机台时，务必关掉电源

● 停电时请务必关掉电源

● 为了总是安全的使缝纫机运转良好，日常的检点是不可缺少的，请予以注意

● Turn the power off before leaving machine table

● In the event of a power failure, be sure to turn the machine off

● To guarantee the machine always works well and safety, pay more atention to the daily spot check

供油 Lubrication

加油时油量使油量面处于H线与L线之间为好，当油面低于L线时，就要及时补充机油

After filling the oil pan, the top of and indicator should lie between (H) and (L) line add oil, when the oil level indicators reaches or goes below (L)

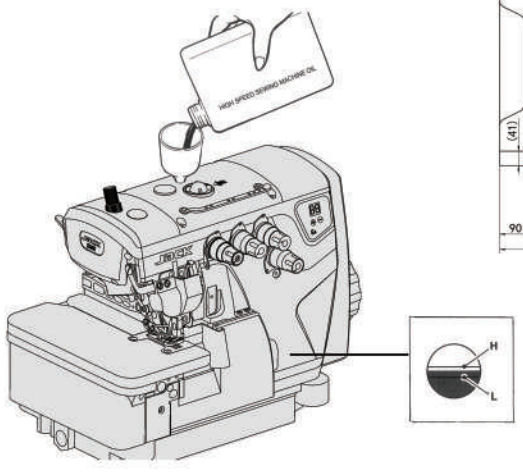

台板加工图

Schematic digram of the machine table

请参照下图进行台板加工

Cut the table referring to the diagram

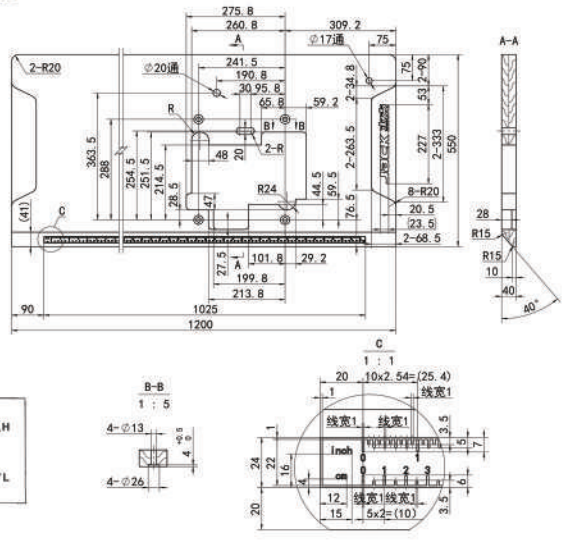

穿线的方法 Threading

打开压脚杆及机盖（三处），把机上原有的线与缝纫用线绑在一起

Open three overs, Sewing the presser foot aside kont the preset thread and the thread being used together to thread the machine

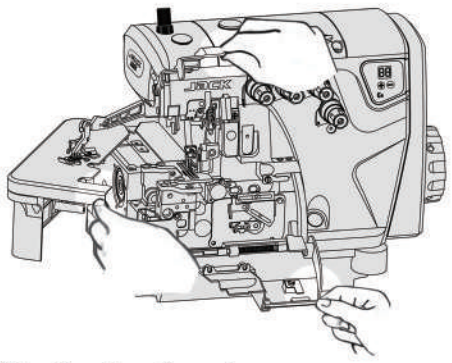

针线 Needle thread

将线拉到针眼前，剪掉结头再次穿好针线，若机上原来没有线请参照穿线图正确进行穿线，弯针线，线拉出接头后，用剪刀剪齐接头

Trim the knots off neatly before passing through the needle to rethread, Make sure the machine is thrasded correctly by refering to threading digram, looper thread Trim the knots off neatly after passing through the eye of the looper

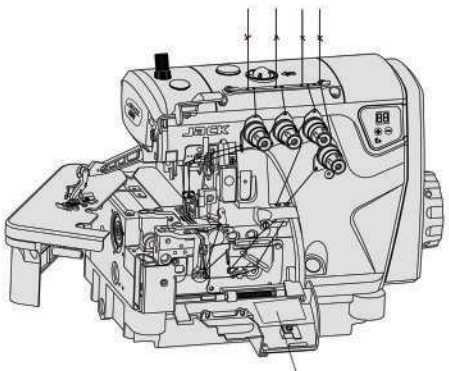

过线图 Threading diagram

压脚压力的调节

Adjusting the presser foot pressure

压脚压力的调节，松开螺母①，调节螺母②

Loosen adjusting nut① and then turn adjusting nut② to adjusting the presser foot pressure, It should be as light as possible in the feed sitution when the steady state was obtained

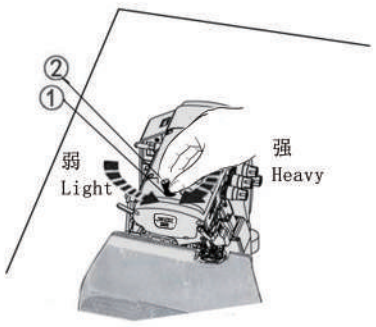

缝纫机的清扫 Cleaning the machine

缝纫机的清扫，以针板槽及送布牙周围为主

Mainly the slots of the needle plate and the feed rows should be of cleaned

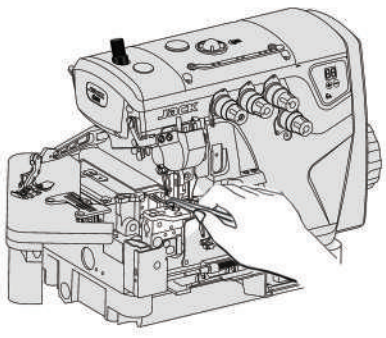

换针

Replacing the needle

准确辨认针的前后，请将针凹向着后方，即背向操作者进行安装，针要牢固的插到最深处

Check the needle carefully to see that the scarf is turned to the rear of the machine

Insert the needle to the proper depth and fasten securely

标准使用针：

风琴DCX27

Standard needle

Organ DCX27

手动供油 Manual Lublication

手动供油是在缝纫机最初开始使用时，或者相当一段时间未使用时，请供给2-3滴油

Apply 2 or 3 drops of oil by hand when the machine is used for the first time or has been left unused for some time

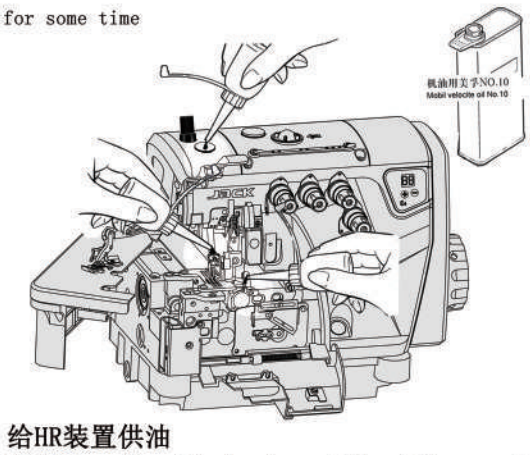

给HR装置供油

Filling the HR device with silicon oil

为了防止布纤维或线被切断，请尽早给HR装置供油

注：关于购买硅脂油，请询问缝纫机代销店或本公司营业厅联系

illing the device with oil before it is too low in der prevent needle thead breakage and fabric dama

te: Use recomended silicon oil

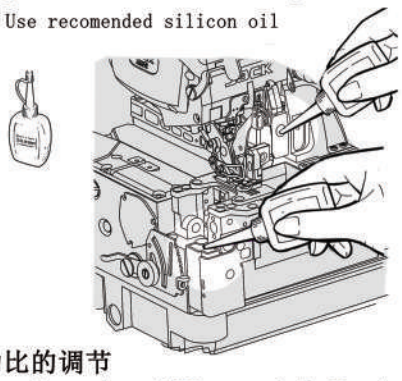

差动比的调节

Adjusting the differential feed ratio

差动比的调节，松开螺母①，调节螺母②

Loosen the adjusting nut① and turn the adjusti nut② to adjusting the differntial feed ratio

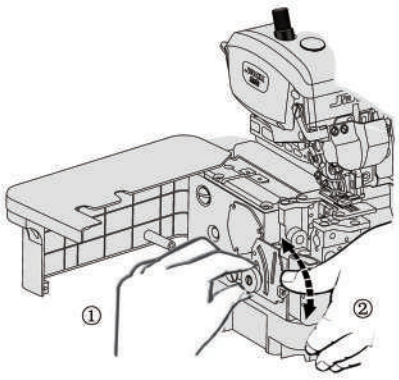

针脚长度的调节

Adjusting the thread tension

1.摁住按钮，旋转手轮，按钮会陷进更深处

2。这时边摁住按钮边转动手轮，使校准标记号对准所希望的数值

1.While pressing the push button, turn the hangwheel to seek the position at which the hangwheel and set the desired scale to push button goes further into the depth

2.Then, keeping the push button pressed turn the aligning mark

注：针脚长度的调节务必请在调节差动比之后进行

Note: Stitch length adjusting must only be made after the differentail feed ratio has been changed

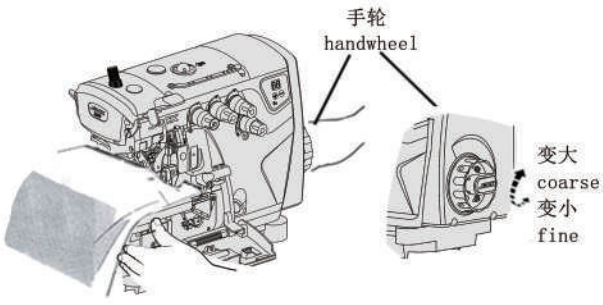

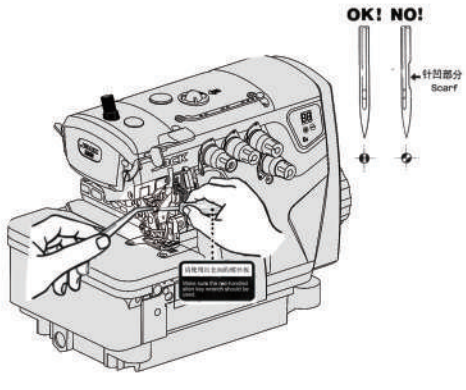

线状态的调节
Adjusting the theread tension

线张力状态的调节，针线调节请用螺帽①，上弯针线调节请用螺帽②，下弯针线调节螺帽请用螺帽③进行调节

Make thension adjustments with the needle thread knob①, the upper looker knob② and the lower looper knob③

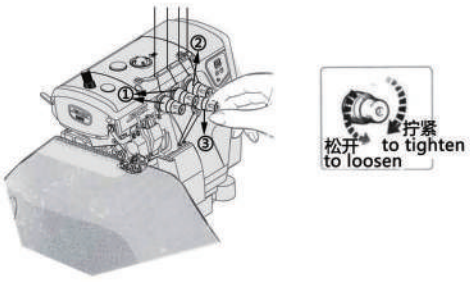

检查油质量，更换油芯
Checking and replacing the oil filler

机油每6个月检查并更换

Check and replace the oil filler every six months

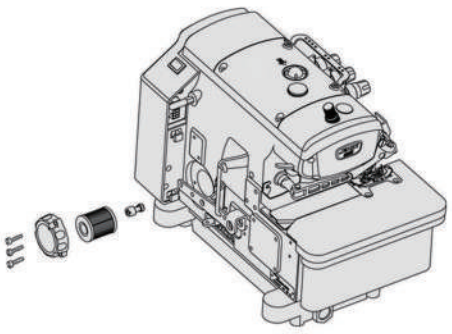

检查机油的循环
Checking the oil circulation

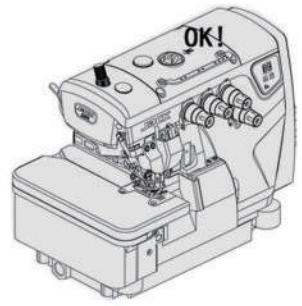

换机油 Replacing the oil

机油的更换，请在使用开始1个月后更换一次，然后，请6个月更换一次

Replacing the oil one month after the firstuse and every six months thereafter

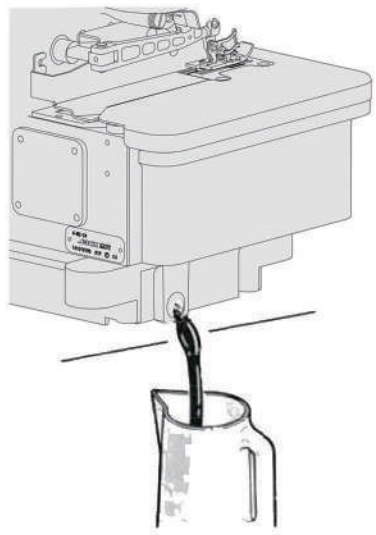

下刀片的更换 Replacing the lower knife

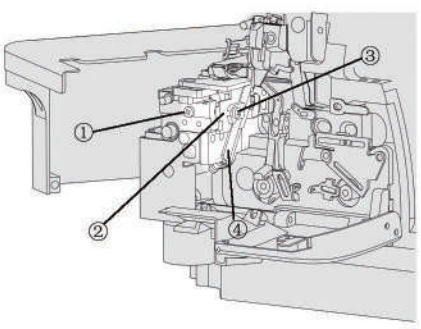

①松开螺丝 Loosen the screw

②把下刀架推向左边，用螺丝①暂时固定
Temporanily screw① after sliding the lower holder to the left

③松开螺丝 Loosen the screw

④取下下刀片 Remove the lower knife

安装下刀片 Install the lower knife

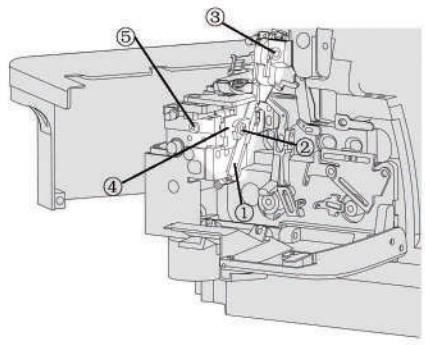

①装入下刀片 Insert the lower knife

②拧紧螺丝 Tighten the screw

③转动手轮将上刀移动对准如图所示位置
Turn the handwheel as the drawing on the right figure

④松开螺丝⑤，下刀架则向右移动
Loosening the screw⑤ makes the lower knife holder slide to the right

⑤拧紧螺丝 Tighten the screw

下刀片正确的研磨角度

Conect angles to resharpen the lower knife

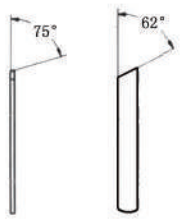

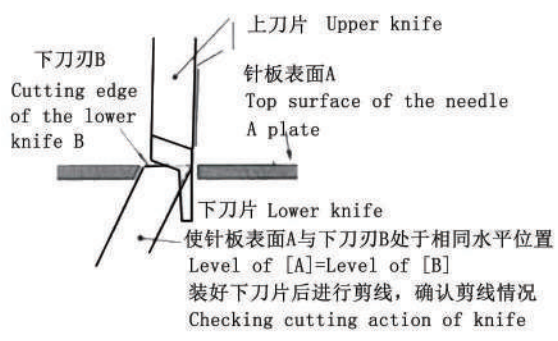

E4调整基准表

机型	机针高度	下弯针引量	上弯针Upper looper-needle				二重环引量	送布Feed dog				
			出量	高度	弯针架左右位置	上弯针座安装方向		送齿倾斜度	送齿高度	辅助送齿高度差	送布偏心量	速度
Subclass	Needle height	Lower looper-needle setting distance	Upper looper-needle setting distance	Upper looper-needle height	Looper holder position of the left and right	Upper looper bracket installation direction	Double chainstitch looper-needle setting distance	Feed dog Inclination	Feed dog height	Auxillary feed dog height	Feeding eccentricity	Speed
E4-2	10.5	3.8	4.4-4.7	10.8	14.5	左	—	针板上面水平	0.8	0.5	0.35-2	
E4-02/250	9.6-9.8	——	——	——	——	——	1.4-1.6	针板上面水平	0.7-0.9	0.5	0.35-2	
E4-3-02/233	10.5	3.8	4.4-4.7	10.8	14.5	左	—	针板上面水平	0.8	0.5	0.35-2	
E4-3-32R2/223	10.5	3.8	4.4-4.7	10.8	14.5	左	—	针板上面水平	0.6-0.7	0.5	0.35-1.7	
E4-3-82/233	10.5	3.8	4.4-4.7	10.8	14.5	左	—	针板上面水平	0.8	0.5	0.35-2	
E4-3-12/233	10.5	3.8	4.4-4.7	10.8	14.5	左	—	针板上面水平	0.8	0.5	0.35-2	
E4-4-83/323	10.5	3.8	5.4-5.7	11.5	13.5	右	—	针板上面水平	0.8	0.5	0.35-2	
E4-4-M03/333	10.5	3.8	5.4-5.7	11.5	13.5	右	—	针板上面水平	0.8	0.5	0.35-2	
E4-4-M03/333/H/M	11.5	3.8	3.7-3.9	11.5	13.5	右	—	针板上面水平	0.8	0.5	0.35-2	5500
E4-5-03/233	10.5	3.8	4.4-4.7	10.8	14.5	左	1.5	针板上面水平	0.8	0.5	0.35-2	
E4-5-03/333	10.5	3.8	4.4-4.7	10.8	14.5	左	1.5	针板上面水平	0.8	0.5	0.35-2	
E4-5-A04/435	11.9	4.2	5.0-5.3	12	14.5	左	1.7	针板上面水平	1.1	0.5	0.35-2	
E4-5-02A/223	10.5	3.8	4.4-4.7	10.8	14.5	左	1.5	针板上面水平	0.8	0.5	0.35-2	
E4WF-3-02/213	10.5	3.8	4.4-4.7	10.8	14.5	左	—	针板上面水平	0.8	0.5	0.35-2	
E4-6-03/333	10.5	3.8	5.4-5.7	10.5	13.5	右	—	针板上面水平	0.8	0.5	0.35-2	
E4-5-53/233	10.5	3.8	4.4-4.7	10.8	14.5	左	1.5	针板上面水平	0.8	0.5	0.35-2	
E4MJ-4-53/233	10.5	3.8	5.4-5.7	11.5	13.5	右	—	针板上面水平	0.8	0.5	0.35-2	

包缝机E4电控箱操作说明书

Instructions of E4 overlock sewing machine panel operation

本控制器使用双位数码管显示实现参数调整。在 P 主界面，第一个数码管显示“P”，第二个数码管显示当前设定的停针位置，上、下停针如图所示（图 1）.

In P interface, the first tube display “P”, the second tube display shows the current needle position, picture 1 shows the upper and lower needle position.

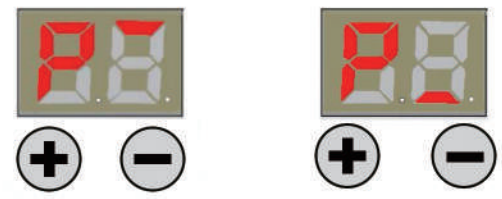

图 1 上、下停针显示界面

1. 转速的修改 Modify speed

在待机 P 界面按✚键或者━键，显示当前转速，按✚键速度递增 100RPM（数值递增 1），按━键速度递减 100RPM（数值递减 1），长按✚键（━键）可实现快速递增（递减），停止按✚键或者━键后约 3 秒，自动保存设定的速度参数，并回退到 P 界面。

The panel shows “P”. Then press ✚ or ━ to adjust speed up and down, short-press ✚ or ━ to adjust speed up 100RPM and down 100RPM, long-press ✚ (━) speed rapidly up (down). After 3 seconds, the parameter saved and the panel back to the “P”.

2. 停针位修改 Needle Position Adjust

在 P 界面下，长按✚键约 3 秒不松开，可以调节上下停针位。

The panel shows “P”, press ✚ for 3 seconds, then set the position up or down.

3. 恢复出厂设置 Factory reset

在 P 界面，长按━键 3 秒，参数将恢复出厂设置。(J4、J5、J6的监控数据除外)

The panel shows “P”, press ━ for 3 seconds, the parameter will back to factory setting.

4. 操作参数说明表 Parameter description

序号 NO.	参数定义 parameter	范围 range	默认值 Default	参数说明 Description
在 P 界面，长按✚和━组合键 3s，可进入技术员界面，并显示 F The panel shows “P”, press ✚ and ━ for 3 seconds, inter engineers interface, and it shows “F”				
K	机头灯亮度调节 LED light adjustment	0 - 3	2	0：灭 off 1~3：亮度 1~3 level 1~3
L	缝纫限制速 Limited sewing speed	05 - 55	50	以 500rpm 为单位递减 Decline by 500rpm every time
M	停针位开关 Switch of needle position	0 - 1	1	0：关闭 off 1：开启 on
H	休眠时间 Dormancy time	0 - 6	3	0：关闭 off unit：10min
V	速度显示使能 Speed display	0 - 1	0	0：关闭 off 1：开启 on
在 F 界面，长按━键 3s，进入监控参数，并显示 J The panel shows “P”, press ━ for 3 seconds, inter monitoring parameter, and it shows “J”				
J1	实时速度 Real-time Speed	显示的数×100=实际速度 the showing number multiples by 100 equal to the real speed.		
J2	实时功率 Real-time Power	显示的数×10=实际功率 the showing number multiples by 10 equal to the real power.		
J3	输入电压 Input Voltage	显示的数×10=实际电压 the showing number multiples by 10 equal to the real voltage.		
J4	历史电压 Historical Voltage	显示历史输入最低电压和最高电压 Display the historical lowest input voltage and highest input voltage.		
J5	历史错误代码 Historical Error	显示最新的 5 个错误代码 Display historical error code(only show the latest 5).		
J6	累计运行时间 Cumulative Running Time	显示的数×100=实际时间（Hour） the showing number multiples by 10 equal to the real time(hour).		

5. 错误码说明表 Error code description

错误 Error code	内容 Reasons	对策 Solutions
E1	电机堵转 Motor stuck	请转动手轮检查机头是否卡住或者干涩转动困难；请检查电机插件是否松动或者脱落；请检查加工物料是否过厚，电机因扭力不足而无法贯穿；请检查机器是否缺少润滑油。 The motor run out of load capacity, please reduce the load capacity for the motor and then restart the motor; Please check if the plug of motor loose or drop; Please check if the sewing material is too heavy; Please check if the machine needs lubrication.
E2	软件过流 software over-current	请关电后重新上电，如果不能消除报警，请检查：电机负荷过大，请减轻负荷后重启电机；Motor used too much, Restart machine after several minutes, then please check if the fabric much too heavy.
E3	参数保存异常 Parameter save abnormal	出现此种状况，需要关闭电源，稍后再打开电源开关即可； 恢复出厂设置（长按━键约 3s 不松开）； 若重启或者恢复出厂设置后也不能解决，建议联系经销商解决。Restart machine after several minutes or reset machine(press ━ 3s); If the problem unsolved, please contact dealers.
E4	电机霍尔信号异常 Hall of the motor with problem	请检查电机编码器插头连接是否可靠，编码器信号线是否有断线，插针是否退出或者变形。Please check if the 10core line connect well or not, please check if the connect line of hall is well or not.
E5	定位器信号异常 The synchronizer signal	请检查定位器是否连接电控；请检查上下定位信号是否正常。 Forget to insert the synchronizer cable before turn on the machine To check the both up needle position signal and the down needle position signal is working.
E6	调速器异常 Speed governor abnormal	请检查压脚机构是否回到正确位置，压脚安全开关是否损坏，插座是否正常。To check if the presser foot back to the correct position or not , to check if the safety switch button is damaged or not, the outlet is abnormal or not.
E7	电流检测电路故障 Current detection and circuit fault	请检查电路板是否干净清洁；请检测电源电压是否正常； 请等待电源重新开启/复位（请仔细检查电源板各项机能）。Please check whether the circuit board is clean; Please check whether the power voltage is normal; Please wait after restarting the power or reset(please carefully check each function of the power board).
EA	硬件过流 Hardware over-current	请关电后重新上电；请检查供电电压是否正常；请尝试恢复出厂设置。Please cut off the power and restart;Please check whether the supply voltage is normal;Please try to restore factory defaults.
Eb	系统过电压 System over-voltage	立即切断电源，并检查供电电压是否过高，如果是，请调整供电电压到额定电压后再开机工作（额定电压：220V）。Immediately cut off the power, and check whether the supply voltage is too high, if yes,please adjust the rated voltage, then start to work(rated voltage:220v).
EC	系统欠电压 System under-voltage	请检查供电电压是否正常；请等待电源重新开启/复位（请仔细检查电源板各项机能）。Mean the voltage abnormal, please check if the voltage is normal or not; Means waiting for the power, and need to restart again or recover to the factory reset.